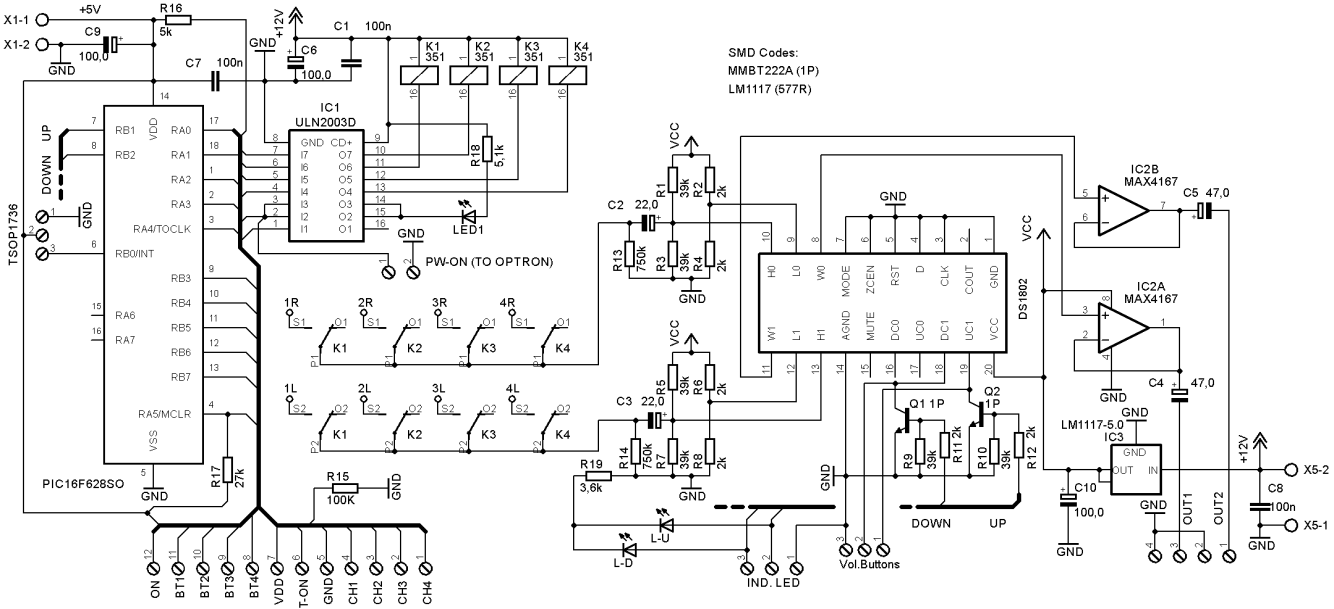
SMD Codes:
MMBT222A (1P)
LM1117 (577R)
X1-1
X1-2
+5V
R16
5k
C9
100,0
GND
C7
100n
+12V
C6
100,0
C1
100n
K1
351
K2
351
K3
351
K4
351
IC1
ULN2003D
GND CD+
I7 O7
I6 O6
I5 O5
I4 O4
I3 O3
I2 O2
I1 O1
R18
5,1k
LED1
PW-ON (TO OPTRON)
TSOP1736
UP
DOWN
PIC16F628SO
VDD
VSS
RB1
RB2
RA0
RA1
RA2
RA3
RA4/TOCLK
RB0/INT
RB3
RB4
RB5
RB6
RB7
RA6
RA7
RA5/MCLR
R17
27k
R15
100K
1R
2R
3R
4R
1L
2L
3L
4L
S1
S2
Q1
Q2
P1
P2
K1
K2
K3
K4
ON
BT1
BT2
BT3
BT4
VDD
BT-ON
GND
CH1
CH2
CH3
CH4
VCC
R1
39k
R2
2k
C2
22,0
R13
750k
R3
39k
R4
2k
R5
39k
R6
2k
C3
22,0
R14
750k
R7
39k
R8
2k
R19
3,6k
L-U
L-D
IND. LED
DS1802
H0
L0
W0
MODE
ZCEN
RST
D
CLK
COUT
GND
W1
L1
H1
AGND
MUTE
DO0
UO0
DC1
UC1
VCC
Q1 1P
Q2
1P
R9
39k
R11 2k
R10
39k
R12 2k
Vol.Buttons
DOWN
UP
IC2B
MAX4167
C5
47,0
IC2A
MAX4167
C4
47,0
LM1117-5.0
IC3
GND
OUT
IN
C10
100,0
C8
100n
OUT1
OUT2
X5-2
X5-1