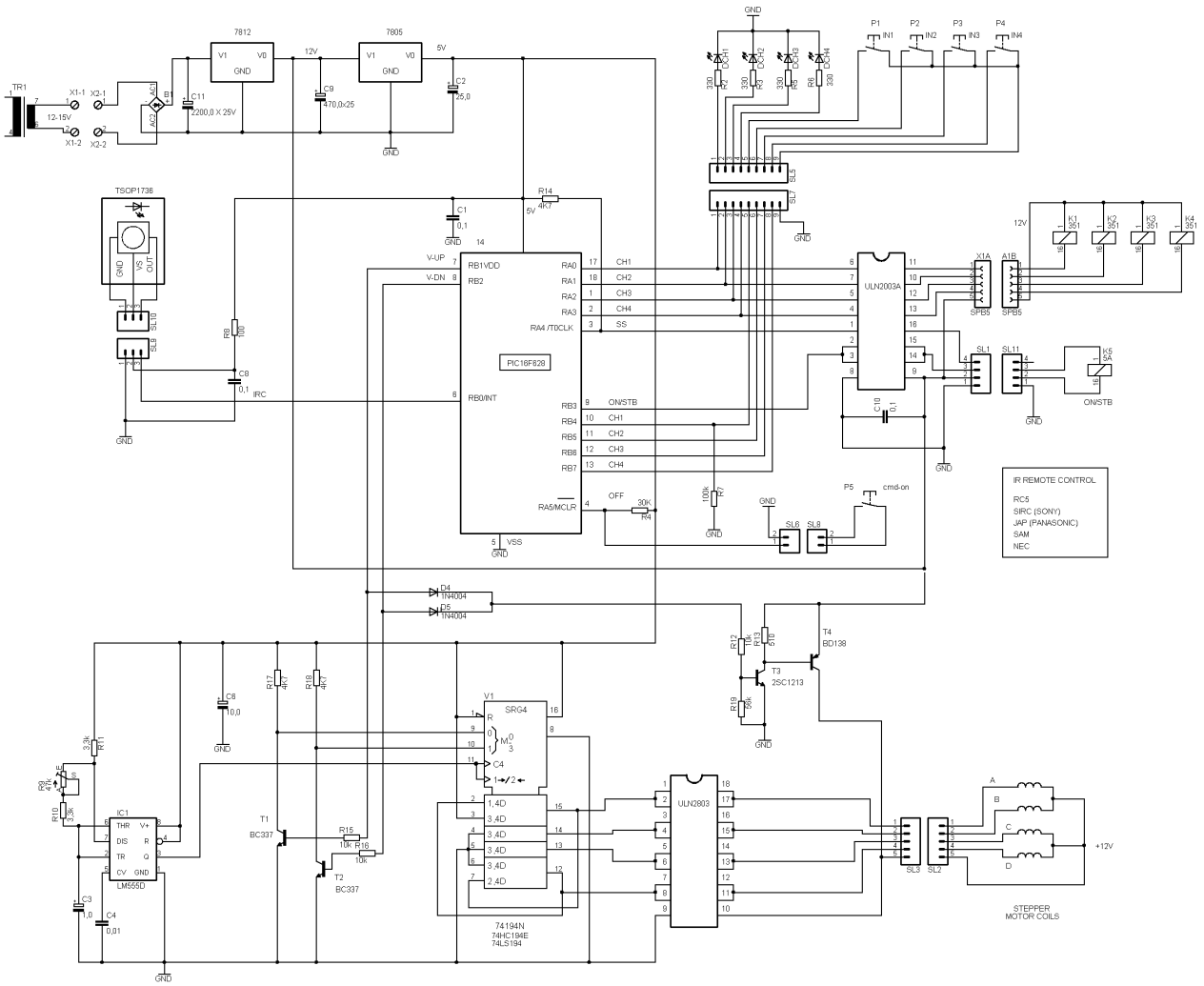
TR1
12-15V
X1-1
X1-2
X2-1
X2-2
AC1
AC2
B1
C11
2200,0 X 25V
7812
V1
V0
GND
12V
C9
470,0x25
7805
5V
C2
25,0
GND
TSOP1738
GND
VS
OUT
SL10
SL9
R8
100
C8
0,1
IRC
C1
0,1
R14
4k7
PIC16F628
RB1VDD
RB2
RB0/INT
RA0
RA1
RA2
RA3
RA4 /T0CLK
RB3
RB4
RB5
RB6
RB7
RA5/MCLR
VSS
V-UP
V-DN
CH1
CH2
CH3
CH4
SS
ON/STB
OFF
30K
R4
100k
R7
SL6
SL8
P5
cmd-on
ULN2003A
C10
0,1
X1A
A1B
SPB5
SL1
SL11
K5
5A
ON/STB
K1
351
K2
351
K3
351
K4
351
P1
P2
P3
P4
IN1
IN2
IN3
IN4
330
R1
R2
R3
R4
DCH1
DCH2
DCH3
DCH4
SL5
SL7
IR REMOTE CONTROL
RC5
SIRC (SONY)
JAP (PANASONIC)
SAM
NEC
D4
1N4004
D5
1N4004
R12
10k
R13
510
T4
BD138
T3
2SC1213
R19
56k
C8
10,0
R17
4k7
R18
4k7
V1
SRG4
R
M
0
3
C4
1→/2←
1,4D
3,4D
3,4D
3,4D
2,4D
74194N
74HC194E
74LS194
ULN2803
3,3k
R11
P9
10k
R10
3,3k
IC1
THR
V+
DIS
R
TR
Q
CV
GND
LM555D
C3
1,0
C4
0,01
T1
BC337
R15
10k
R16
10k
T2
BC337
SL3
SL2
A
B
C
D
+12V
STEPPER
MOTOR COILS